Cambridge International AS & A Level

Cambridge International Examinations
Cambridge International Advanced Subsidiary and Advanced Level

CANDIDATE NAME

CENTRE NUMBER | | | | | |

CANDIDATE NUMBER | | | | |

9832786353

PHYSICS **9702/43**

Paper 4 A Level Structured Questions **October/November 2018**

2 hours

Candidates answer on the Question Paper.

No Additional Materials are required.

READ THESE INSTRUCTIONS FIRST

Write your Centre number, candidate number and name on all the work you hand in.
Write in dark blue or black pen.
You may use an HB pencil for any diagrams or graphs.
Do not use staples, paper clips, glue or correction fluid.
DO **NOT** WRITE IN ANY BARCODES.

Answer **all** questions.

Electronic calculators may be used.
You may lose marks if you do not show your working or if you do not use appropriate units.

At the end of the examination, fasten all your work securely together.
The number of marks is given in brackets [ ] at the end of each question or part question.

This document consists of **25** printed pages and **3** blank pages.

© UCLES 2018

CAMBRIDGE International Examinations

Data

speed of light in free space	$c = 3.00 \times 10^{8}\,\text{m s}^{-1}$
permeability of free space	$\mu_0 = 4\pi \times 10^{-7}\,\text{H m}^{-1}$
permittivity of free space	$\varepsilon_0 = 8.85 \times 10^{-12}\,\text{F m}^{-1}$
	$(\frac{1}{4\pi\varepsilon_0} = 8.99 \times 10^{9}\,\text{m F}^{-1})$
elementary charge	$e = 1.60 \times 10^{-19}\,\text{C}$
the Planck constant	$h = 6.63 \times 10^{-34}\,\text{J s}$
unified atomic mass unit	$1\,\text{u} = 1.66 \times 10^{-27}\,\text{kg}$
rest mass of electron	$m_e = 9.11 \times 10^{-31}\,\text{kg}$
rest mass of proton	$m_p = 1.67 \times 10^{-27}\,\text{kg}$
molar gas constant	$R = 8.31\,\text{J K}^{-1}\,\text{mol}^{-1}$
the Avogadro constant	$N_A = 6.02 \times 10^{23}\,\text{mol}^{-1}$
the Boltzmann constant	$k = 1.38 \times 10^{-23}\,\text{J K}^{-1}$
gravitational constant	$G = 6.67 \times 10^{-11}\,\text{N m}^2\,\text{kg}^{-2}$
acceleration of free fall	$g = 9.81\,\text{m s}^{-2}$

© UCLES 2018

Formulae

uniformly accelerated motion	$s = ut + \frac{1}{2}at^2$ $v^2 = u^2 + 2as$
work done on/by a gas	$W = p\Delta V$
gravitational potential	$\phi = -\frac{Gm}{r}$
hydrostatic pressure	$p = \rho gh$
pressure of an ideal gas	$p = \frac{1}{3}\frac{Nm}{V}\langle c^2 \rangle$
simple harmonic motion	$a = -\omega^2 x$
velocity of particle in s.h.m.	$v = v_0 \cos \omega t$ $v = \pm \omega \sqrt{(x_0^2 - x^2)}$
Doppler effect	$f_o = \frac{f_s v}{v \pm v_s}$
electric potential	$V = \frac{Q}{4\pi\varepsilon_0 r}$
capacitors in series	$1/C = 1/C_1 + 1/C_2 + \ldots$
capacitors in parallel	$C = C_1 + C_2 + \ldots$
energy of charged capacitor	$W = \frac{1}{2}QV$
electric current	$I = Anvq$
resistors in series	$R = R_1 + R_2 + \ldots$
resistors in parallel	$1/R = 1/R_1 + 1/R_2 + \ldots$
Hall voltage	$V_H = \frac{BI}{ntq}$
alternating current/voltage	$x = x_0 \sin \omega t$
radioactive decay	$x = x_0 \exp(-\lambda t)$
decay constant	$\lambda = \frac{0.693}{t_{\frac{1}{2}}}$

© UCLES 2018

[Turn over

BLANK PAGE

© UCLES 2018

Answer **all** the questions in the spaces provided.

1 (a) (i) State what is meant by *gravitational potential* at a point.

.....

.....

.....[2]

(ii) Suggest why, for small changes in height near the Earth's surface, gravitational potential is approximately constant.

.....

.....

.....

.....[2]

(b) The Moon may be considered to be a uniform sphere with a diameter of 3.5×10^3 km and a mass of 7.4×10^{22} kg.

A meteor strikes the Moon and, during the collision, a rock is sent off from the surface of the Moon with an initial speed v.

Assuming that the Moon is isolated in space, determine the minimum speed of the rock such that it does not return to the Moon's surface. Explain your working.

minimum speed = ... $m\,s^{-1}$ [3]

[Total: 7]

© UCLES 2018

[Turn over

2 **(a)** State what is meant by the *internal energy* of a system.

.....

.....

.....

.....[2]

(b) An ideal gas undergoes a cycle of changes as shown in Fig. 2.1.

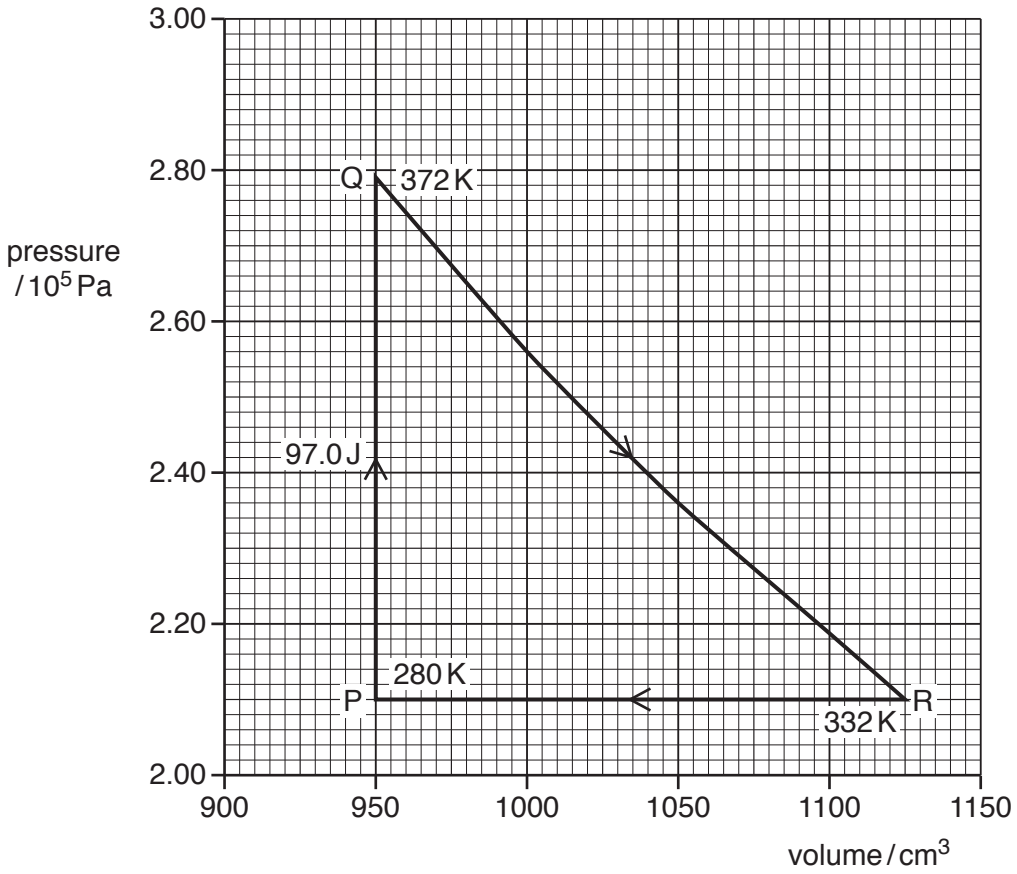

Fig. 2.1

At point P, the gas has volume 950 cm^3, pressure 2.10×10^5 Pa and temperature 280 K.

The gas is heated at constant volume and 97.0 J of thermal energy is transferred to the gas. Its pressure and temperature change so that the gas is at point Q on Fig. 2.1.

The gas then undergoes the change from point Q to point R and then from point R back to point P, as shown on Fig. 2.1.

© UCLES 2018

Some energy changes that take place during the cycle PQRP are shown in Fig. 2.2.

	change P → Q	change Q → R	change R → P
thermal energy transferred to gas / J	+97.0	0	.....
work done on gas / J	.....	−42.5	+37.0
increase in internal energy of gas / J	.....	.....	.....

Fig. 2.2

(i) State the total change in internal energy of the gas during the complete cycle PQRP. Explain your answer.

.....

.....

.....[2]

(ii) On Fig. 2.2, complete the energy changes for the gas during

1. the change P → Q,

2. the change Q → R,

3. the change R → P.

[5]

[Total: 9]

3 A U-tube contains liquid, as shown in Fig. 3.1.

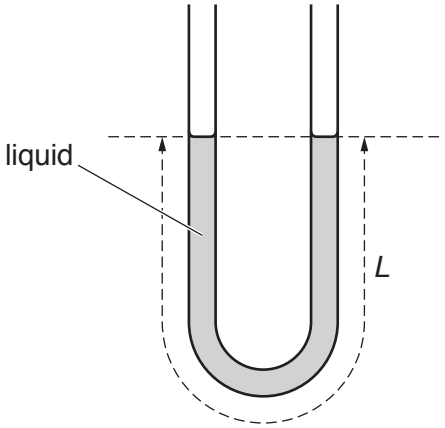

Fig. 3.1

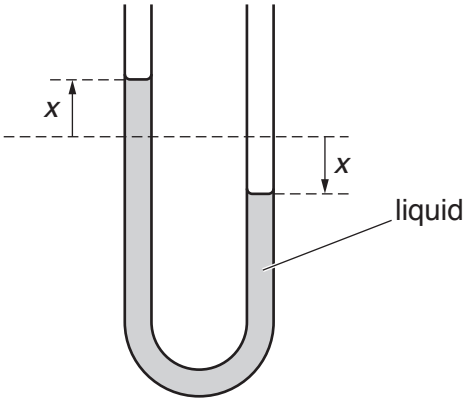

Fig. 3.2

The total length of the column of liquid in the tube is L.

The column of liquid is displaced so that the change in height of the liquid in each arm of the U-tube is x, as shown in Fig. 3.2.

The liquid in the U-tube then oscillates with simple harmonic motion such that the acceleration a of the column is given by the expression

$$a = -\left(\frac{2g}{L}\right)x$$

where g is the acceleration of free fall.

(a) Calculate the period T of oscillation of the liquid column for a column length L of 19.0 cm.

T = ... s [3]

© UCLES 2018

(b) The variation with time t of the displacement x is shown in Fig. 3.3.

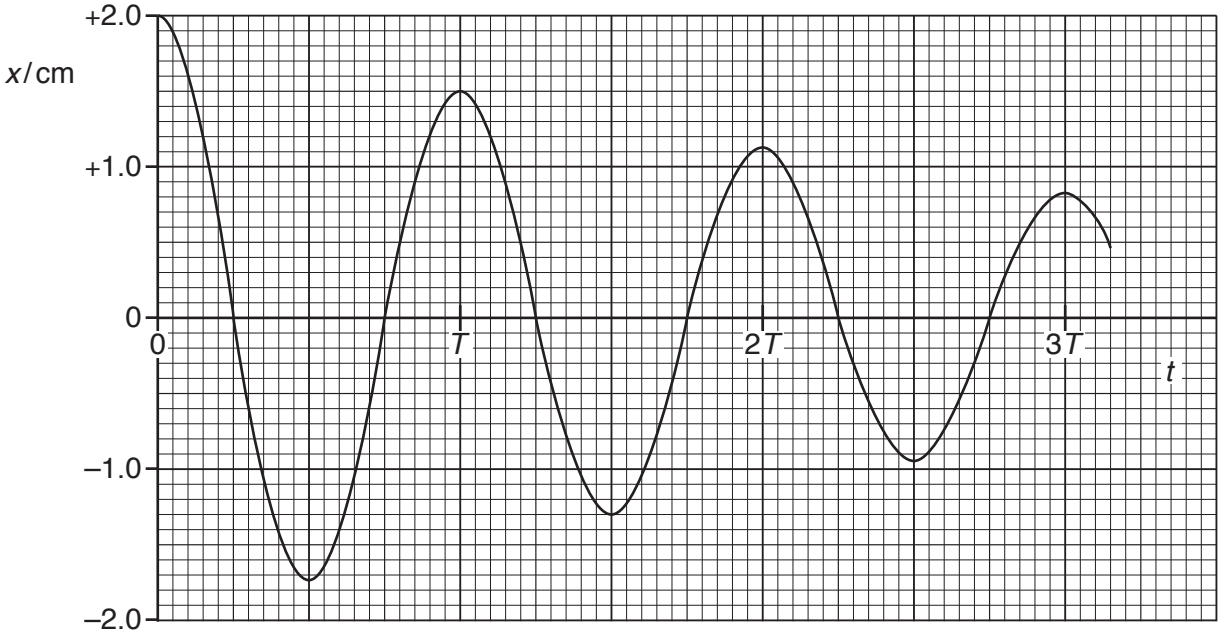

Fig. 3.3

The period of oscillation of the liquid column of mass 18.0 g is T.

The oscillations are damped.

(i) Suggest one cause of the damping.

.....

.....[1]

(ii) Calculate the loss in total energy of the oscillations during the first 2.5 periods of the oscillations.

energy loss = ... J [3]

[Total: 7]

© UCLES 2018

[Turn over

4 **(a)** Explain the main principles behind the **use** of ultrasound to obtain diagnostic information about internal body structures.

.....

.....

.....

.....

.....

.....

.....

.....

.....

.....

.....

.....[6]

(b) (i) Define *specific acoustic impedance*.

.....

.....

.....[2]

(ii) The fraction of the incident intensity of an ultrasound beam that is reflected at a boundary between two media depends on the specific acoustic impedances Z_1 and Z_2 of the media.

Discuss qualitatively how the relative magnitudes of the two specific acoustic impedances affect the reflected intensity.

.....

.....

.....

.....[2]

[Total: 10]

© UCLES 2018

[Turn over

5 **(a)** State two advantages of the transmission of data in digital form, compared with the transmission in analogue form.

1. .....

.....

2. .....

.....

[2]

(b) The digital numbers shown in Fig. 5.1 are transmitted at a sampling rate of 500 Hz.

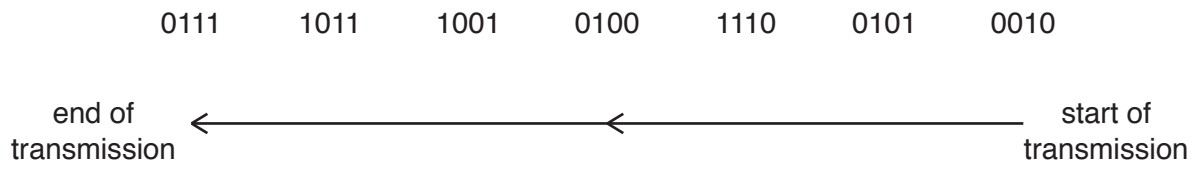

Fig. 5.1

The digital numbers are received, after transmission, by a digital-to-analogue converter (DAC).

On Fig. 5.2, complete the graph to show the variation with time *t* of the signal level from the DAC.

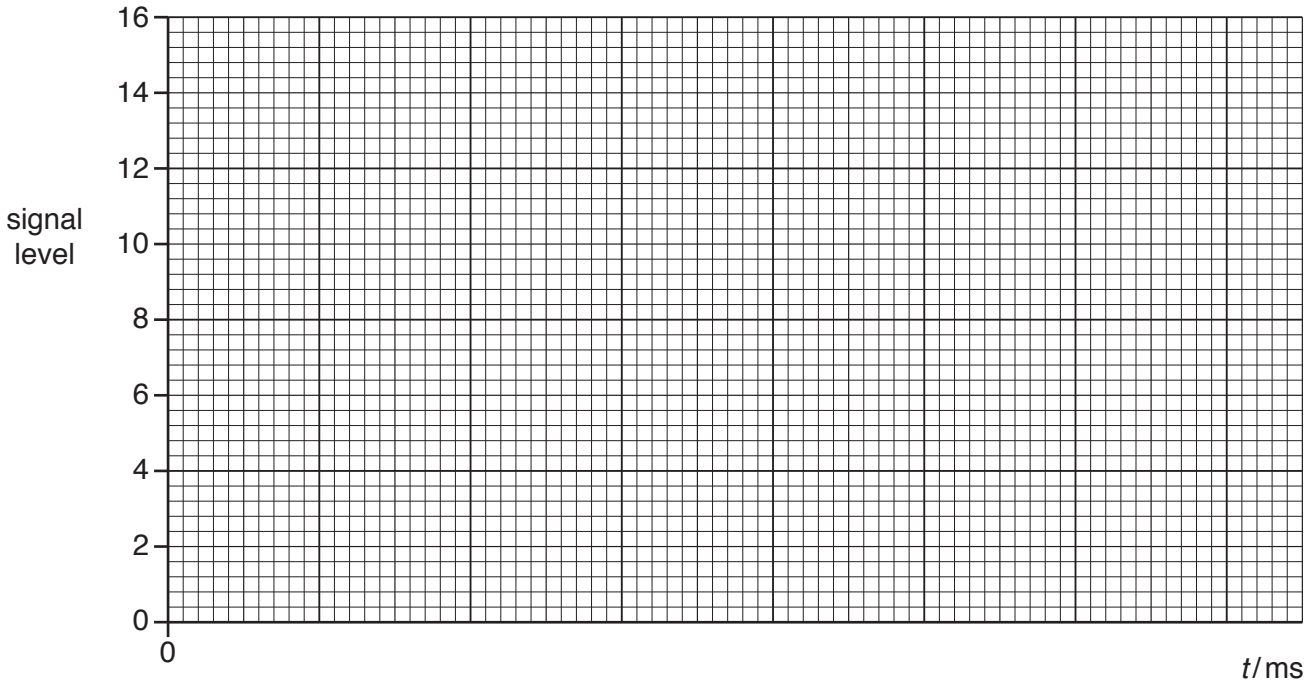

Fig. 5.2

[4]

(c) State the effect on the transmitted analogue signal when

(i) the sampling rate of the analogue-to-digital converter (ADC) and of the DAC is increased,

.....

.....[1]

(ii) the number of bits in each sample is increased.

.....

.....[1]

[Total: 8]

6 **(a)** **(i)** Define *electric potential* at a point.

.....

.....

.....[2]

(ii) State the relationship between electric potential and electric field strength at a point.

.....

.....

.....[2]

(b) Two parallel metal plates A and B are situated a distance 1.2 cm apart in a vacuum, as shown in Fig. 6.1.

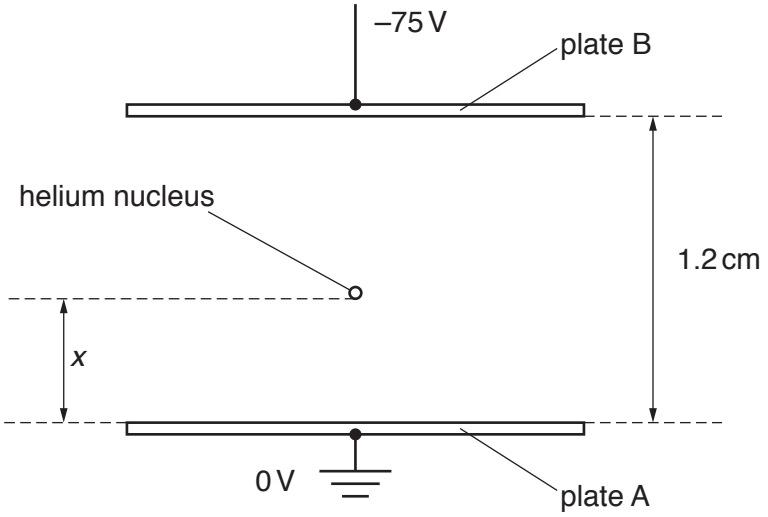

Fig. 6.1

Plate A is earthed and plate B is at a potential of –75 V.

A helium nucleus is situated between the plates, a distance x from plate A.

Initially, the helium nucleus is at rest on plate A where $x = 0$.

(i) The helium nucleus is free to move between the plates. By considering energy changes of the helium nucleus, explain why the speed at which it reaches plate B is independent of the separation of the plates.

.....

.....

.....

.....[2]

© UCLES 2018

(ii) As the helium nucleus ($^4_2$He) moves from plate A towards plate B, its distance x from plate A increases.

Calculate the speed of the nucleus after it has moved a distance $x = 0.40$ cm from plate A.

speed = ... $m\,s^{-1}$ [3]

[Total: 9]

7 **(a)** An ideal operational amplifier (op-amp) has infinite bandwidth and infinite slew rate.

State what is meant by

(i) *infinite bandwidth*,

.....

.....

.....[2]

(ii) *infinite slew rate*.

.....

.....

.....[2]

(b) An incomplete circuit for a non-inverting amplifier incorporating an ideal operational amplifier is shown in Fig. 7.1.

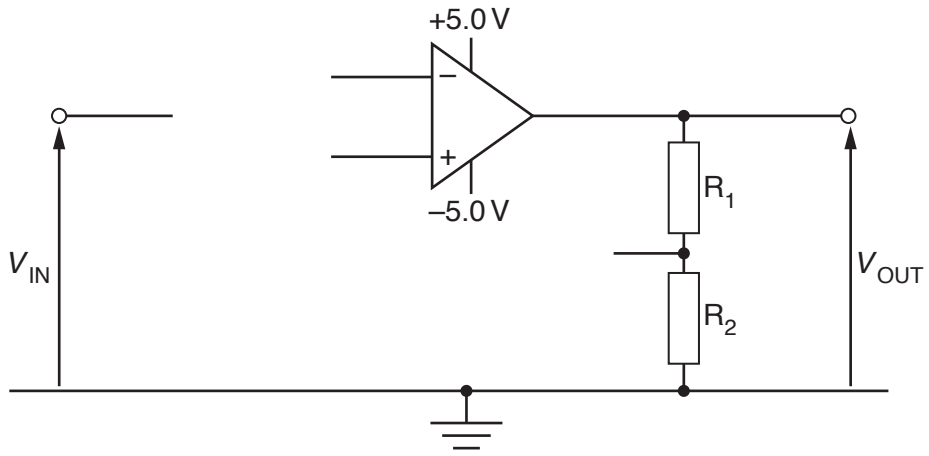

Fig. 7.1

On Fig. 7.1, draw lines to show the connections between the components to complete the circuit. [2]

© UCLES 2018

(c) The completed amplifier of Fig. 7.1 has a voltage gain of 10.

State the output voltage V_{OUT} for an input voltage V_{IN} of

(i) –0.36 V,

V_{OUT} = ... V [1]

(ii) 0.56 V.

V_{OUT} = ... V [1]

[Total: 8]

8 **(a)** Explain what is meant by a *magnetic field*.

.....

.....

.....[2]

(b) A particle has mass m, charge $+q$ and speed v.

The particle enters a uniform magnetic field of flux density B such that, on entry, it is moving normal to the magnetic field, as shown in Fig. 8.1.

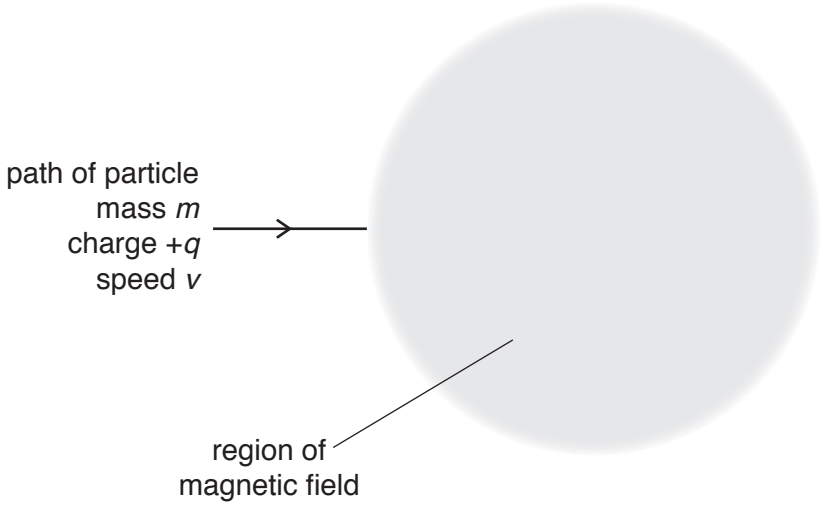

Fig. 8.1

The direction of the magnetic field is perpendicular to, and into, the plane of the paper.

(i) On Fig. 8.1, draw the path of the particle through, and beyond, the region of the magnetic field. [3]

(ii) There is a force acting on the particle, causing it to accelerate.
Explain why the speed of the particle on leaving the magnetic field is v.

.....

.....

.....[1]

© UCLES 2018

(c) The particle in **(b)** loses an electron so that its charge becomes $+2q$. Its change in mass is negligible.

Determine, in terms of v, the initial speed of the particle such that its path through the magnetic field is unchanged. Explain your working.

speed = ... [3]

[Total: 9]

9 **(a)** State Faraday's law of electromagnetic induction.

.....

.....

.....[2]

(b) A solenoid S is wound on a soft-iron core, as shown in Fig. 9.1.

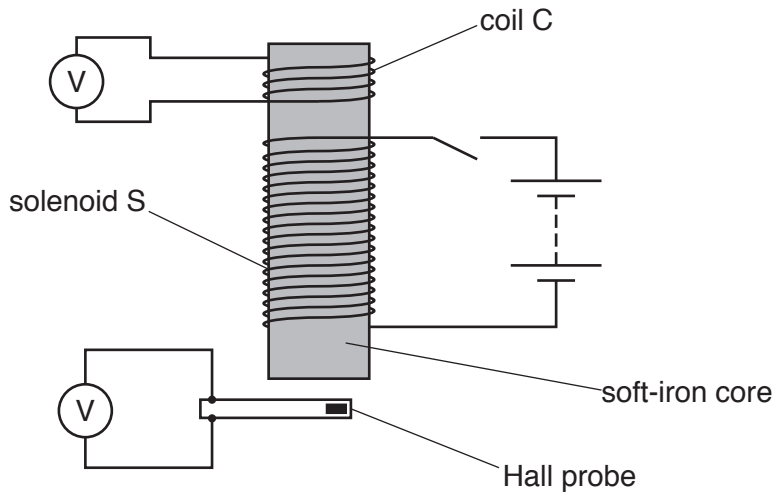

Fig. 9.1

A coil C having 120 turns of wire is wound on to one end of the core. The area of cross-section of coil C is 1.5 cm^2.

A Hall probe is close to the other end of the core.

When there is a constant current in solenoid S, the flux density in the core is 0.19 T. The reading on the voltmeter connected to the Hall probe is 0.20 V.

The current in solenoid S is now reversed in a time of 0.13 s at a constant rate.

(i) Calculate the reading on the voltmeter connected to coil C during the time that the current is changing.

reading = ... V [2]

© UCLES 2018

(ii) Complete Fig. 9.2 for the voltmeter readings for the times before, during and after the direction of the current is reversed.

	before current changes	during current change when current is zero	after current changes
reading on voltmeter connected to coil C / V	.....	.....	.....
reading on voltmeter connected to Hall probe / V	0.20	.....	.....

Fig. 9.2

[4]

[Total: 8]

BLANK PAGE

© UCLES 2018

10 Some of the electron energy bands in a semiconductor material at the absolute zero of temperature are shown in Fig. 10.1.

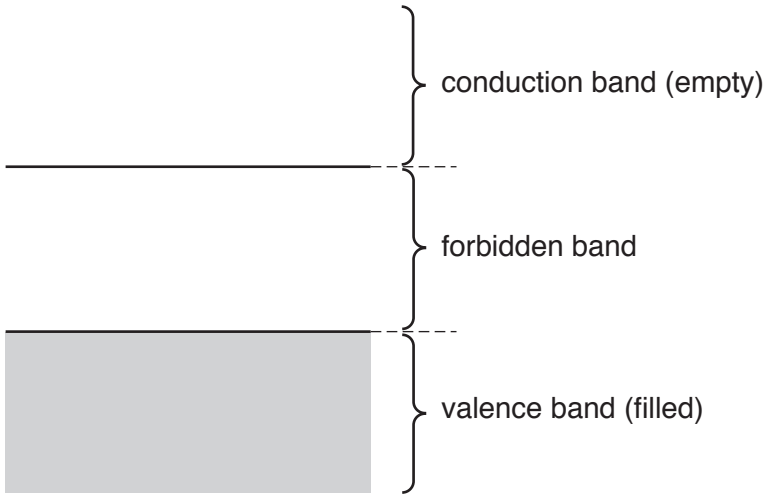

Fig. 10.1

Use band theory to explain why, as the temperature of the semiconductor material rises, the electrical resistance of the sample of material decreases.

.....

.....

.....

.....

.....

.....

.....

.....

.....[5]

11 A stationary isolated nucleus emits a γ-ray photon of energy 0.51 MeV.

(a) State what is meant by a *photon*.

.....

.....

.....[2]

(b) For the γ-ray photon, calculate

(i) its wavelength,

wavelength = ... m [2]

(ii) its momentum.

momentum = ...N s [2]

© UCLES 2018

(c) **(i)** For this nucleus, determine the change in mass Δm during the decay that gives rise to the energy of the γ-ray photon.

Δm = ... kg [2]

(ii) Explain why, after the decay, the nucleus is no longer stationary.

.....

.....

.....[1]

[Total: 9]

12 (a) State what is meant by *radioactive decay*.

.....

.....

.....

.....[3]

(b) The variation with time t of the number N of undecayed nuclei in a sample of a radioactive isotope is shown in Fig. 12.1.

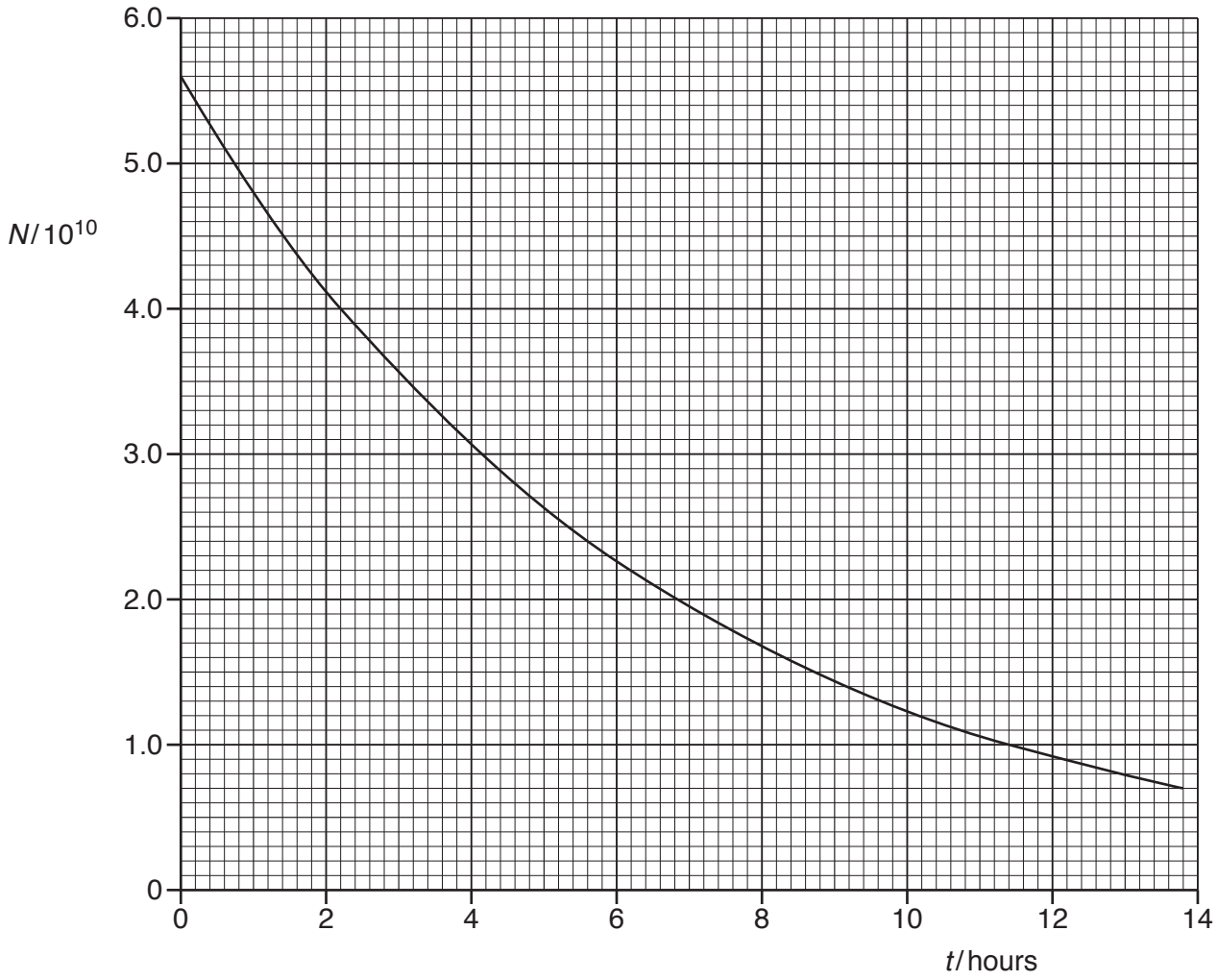

Fig. 12.1

© UCLES 2018

(i) Use the gradient of the line in Fig. 12.1 to determine the activity, in Bq, of the sample at time $t = 4.0$ hours. Show your working.

activity = ... Bq [3]

(ii) Use your answer in **(i)** to show that the decay constant λ of the isotope is approximately $4 \times 10^{-5}\,s^{-1}$.

[2]

(c) A sample of a different radioactive isotope has an initial activity of 4.6×10^{3} Bq. The sample must be stored safely until its activity is reduced to 1.0×10^{3} Bq.

The decay constant of the isotope is $5.5 \times 10^{-7}\,s^{-1}$. The decay products are not radioactive.

Calculate the minimum time, in days, for which the sample must be stored.

time = ... days [3]

[Total: 11]

© UCLES 2018

BLANK PAGE

Permission to reproduce items where third-party owned material protected by copyright is included has been sought and cleared where possible. Every reasonable effort has been made by the publisher (UCLES) to trace copyright holders, but if any items requiring clearance have unwittingly been included, the publisher will be pleased to make amends at the earliest possible opportunity.

To avoid the issue of disclosure of answer-related information to candidates, all copyright acknowledgements are reproduced online in the Cambridge International Examinations Copyright Acknowledgements Booklet. This is produced for each series of examinations and is freely available to download at www.cie.org.uk after the live examination series.

Cambridge International Examinations is part of the Cambridge Assessment Group. Cambridge Assessment is the brand name of University of Cambridge Local Examinations Syndicate (UCLES), which is itself a department of the University of Cambridge.

© UCLES 2018